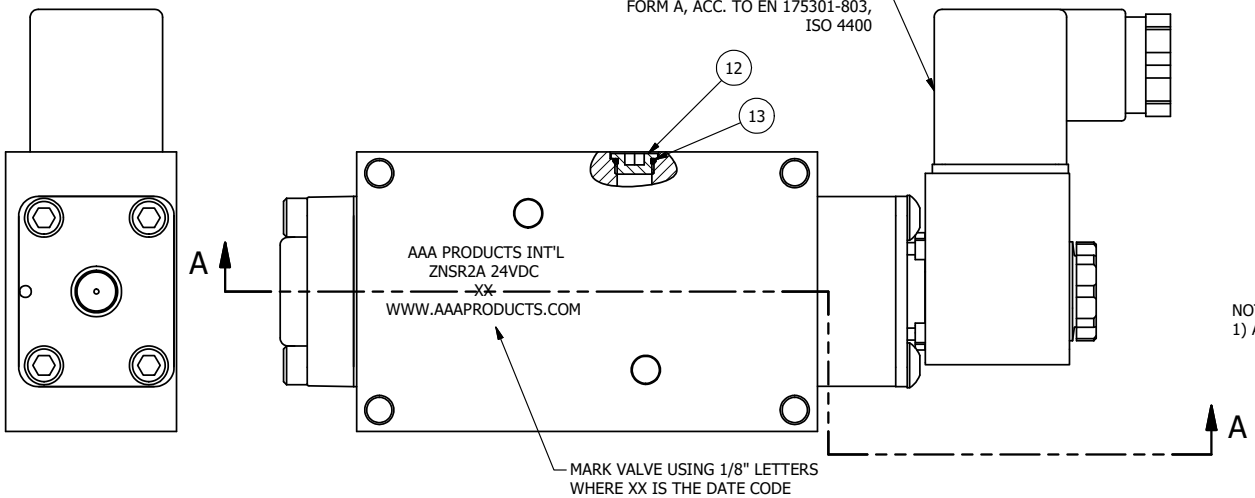

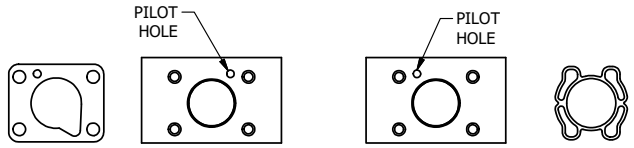

POSITION GASKET TO SEAL PILOT HOLE ON SIDE 'B' ONLY.

ALIGN PILOT AND SLOT IN ADAPTOR WITH GASKET IN BETWEEN SIDE 'A' ONLY FOR EXTERNAL PILOT OPERATION - ROTATE ADAPTOR 180 DEGREES. REMOVE 1/8" NPTF PLUG AND SUPPLY 50-150 PSI TO 1/8" NPTF PILOT PORT IN ADAPTOR.

NOTES:
1) ALWAYS GIVE VALVE MODEL AND PART NUMBER WHEN ORDERING PARTS.

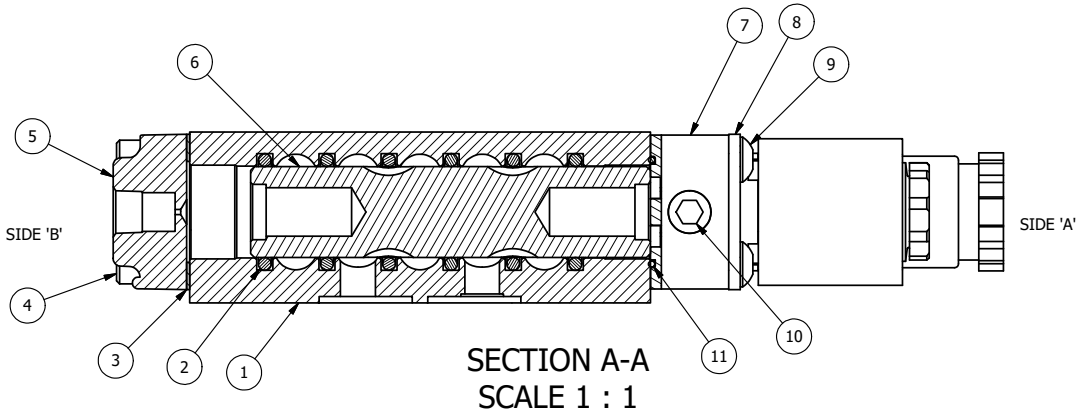

SECTION A-A
SCALE 1 : 1
VIEW FROM 3 PORT SIDE

FLG	QTY	PART NO	DESCRIPTION
14	1	ZNSPK-2	KIT - SUBPLATE MOUNTING, BRASS NAMUR, (2 EA V-618-SS SCREW, 2 EA V-565 O-RING)
13	1	V-548	O-RING, BUNA-N, 70 DURO, 6MM X 1MM, NAMUR PLUG
12	1	V-547	PLUG, 360 HALF HARD BRASS, NAMUR VALVE
11	1	EMG3	GASKET - END MOUNT SOLENOID, BUNA-N, 1/4" & 3/8" VALVES
10	1	V-19-SS	PLUG, SOCKET PIPE 1/8"-27 NPT, 7/8 TAPER, PLAIN, FLUSH SEAL, STAINLESS STEEL
9	4	V-584-SS	SCREW, 10-24 X 1, BUTTON HEAD SOCKET CAP, 18-8 OR 303 SS
8	1	SEC3-7	PLATE, RE-INFORCEMENT, SOLENOID, STAMPED, 304 STAINLESS
7	1	V-564	SYSTEM 8 INTRINSICALLY SAFE SOLENOID OPERATOR.
6	1	S3R	SPOOL - SOLID, STANDARD, 2 POS, CLSD CTR, 1/4" & 3/8" VALVE
5	1	PEC3-11	END CAP, PILOT, STAINLESS STEEL, 1/4" & 3/8" VALVE
4	4	V-38-SS	SCREW, 10-24 X 3/4, SOCKET HEAD CAP, 18-8 SS
3	1	ECG3	GASKET - END CAP, 1/4" & 3/8" VALVE
2	6	V-39	O-RING, VITON, STD BODY, 1/4" & 3/8" VALVES
1	1	Z2-11	BODY - BRASS, UPPER PILOTS (BUTTON BLEEDER), 1/4" NAMUR

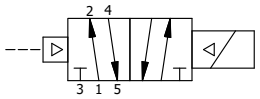

LIMITS ON DIMENSIONS UNLESS OTHERWISE SPECIFIED
2-PL DECIMAL ± .01
3-PL DECIMAL ± .005
FRACTIONAL ± 1/64
ANGULAR ± 1/2'

AAA PRODUCTS INTERNATIONAL
7114 Harry Hines Blvd
Dallas, TX 75235

DRAWN: RMcKenna DATE: 3/5/2015
CHECKED: KWaite DATE: 6/1/2015
SCALE: 1 : 1 SHEET: 1 OF 1
RELEASED: HWomack DATE: 6/1/2015

TITLE: 1/4" NAMUR, SNGL SOL, 2 POS, FRICTION POS, PILOT RTRN, BRASS & STAINLESS, INTR SAFE, 24VDC

PART NO.: ZNSR2A 24VDC

REV.:

D:\Engineering\Product\Valve\Assembly\Standard\SS\DWG\ZNSR2A-24VDC.dwg

THE INFORMATION CONTAINED WITHIN THIS DOCUMENT IS PROPRIETARY TO AAA PRODUCTS AND MAY NOT BE DISCLOSED WITHOUT PRIOR WRITTEN CONSENT